GEFRAN

MK4 P (with ONDA technology)

CONTACTLESS MAGNETOSTRICTIVE LINEAR POSITION TRANSDUCER

(PROFIBUS OUTPUT)

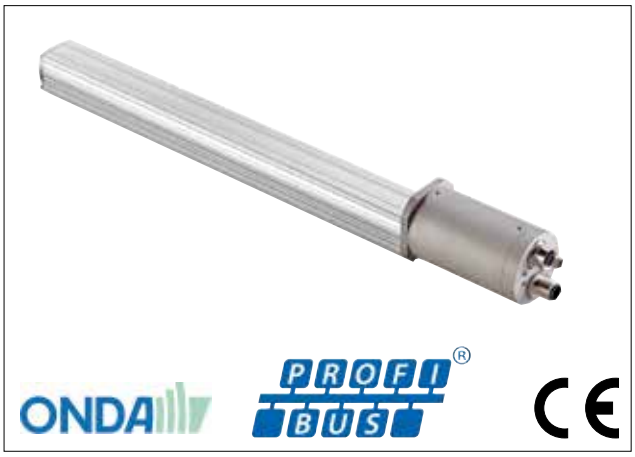

Main features

- *ONDA technology*
- *Stroke: 50 to 4000mm*
- *Position resolution settable via software up to 1 µm*
- *Speed resolution up to 0.25 mm/sec*
- *Conforms to CE directives (EN 50081-1 50082-1)*
- *Vibration-resistant (DIN IEC68T2/6 12 g)*
- *IP67 protection rating*
- *Controls up to four cursors simultaneously*
- *Two M12 connectors for simplified connection to Profibus and one M8 connector for separate connection to power supply (transducer can be powered without having to be connected to bus)*
- *Local intelligence*
- *Profibus DPV0 interface on RS485 in conformity to IEC 61158*

Contactless absolute linear position transducer with ONDA magnetostrictive technology. The Profibus fieldbus interface integrates in complex systems with long communication distances, guaranteeing rapid and secure data transmission.
The absence of contact on the cursor eliminates all wear and ensures almost unlimited life of the transducer.
Its many advantages include smaller size for easier installation, high protection rating for use in harsh environments, excellent linearity, repeatability, and resistance to vibration and shock, guaranteeing exceptional reliability.

TECHNICAL DATA

Model	50 to 4000 mm
Measurement taken	Position / Speed
Position read sampling time (typical)	1 ms
Shock test DIN IEC68T2-27	100g - 11ms - single blow
Vibrations DIN IEC68T2-6	12g / 10...2000Hz
Shift speed	≤10 m/s
Max. acceleration	≤ 100 m/s² shift
Resolution	up to 1µm
Cursor type	Sliding cursor Separate floating cursor
Work temperature	-40...+85°C
Storage temperature	-40...+100°C
Coefficient of temperature	20ppmFS / °C
Protection rating	IP67

ELECTRICAL DATA

Output signal	Profibus DPV0 on RS485
Rated power supply	10-32 Vdc
Max power supply ripple	1Vpp
Max. draw	2W
Min. load on output	RS485 standard
Electrical isolation	500V (*) (D.C. power supply/ground)
Polarity inversion protection	YES
Overvoltage protection	YES
Self-resetting internal fuse	YES
(*) Uses 50V 2J snubber	

Jiangmen LEADER Electronic Co., Ltd.
#68 2nd Str, CuiShanLingShui, WuYi Country Garden, Jiangmen City, Guangdong, China
Tel:+86 750 3289680 3289698 Fax:+86 7503289699
http://www.leadersensors.com E-mail:leader@leadersensors.com

ELECTRICAL / MECHANICAL DATA

Model		50	75	100	130	150	175	200	225	250	300	350	360	400	450	500	550	600	650	700	750	800	850	900	950	1000
											1100	1200	1250	1300	1400	1500	1750	2000	2250	2500	2750	3000	3250	3500	3750	4000
Electrical Stroke (E.S.)	mm	Model																								
Independent linearity	±%F.S	Typical : ≤ ± 0.01 %FS (min ± 0.060mm) with sliding cursor Typical :≤ ± 0.02 % FS with floating cursor (value depends on distance between cursor and sensor body)																								
Max. dimensions (A)	mm	Model + 181.7																								
Repeatability	mm	< 0.01 (limited by resolution of output value)																								
Hysteresis	±%F.S	< ± 0.005% FS (0.010 mm minimum)																								
Sampling time	ms	1 (for strokes up to 800) 2 (for strokes from 850 to 2000) 4 (for strokes >2000) (*)																								
** Note: the sampling time doubles for models using 3 and 4 cursors*																										

MECHANICAL DIMENSIONS

Version MK4PW with sliding magnetic cursor

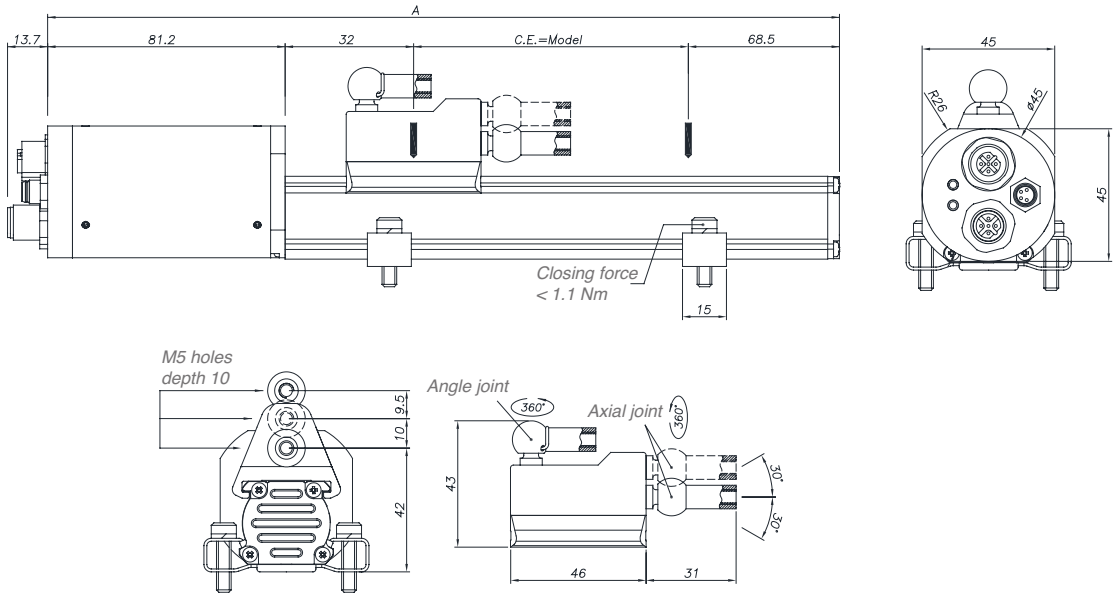

Version MK4PW with floating magnetic cursor

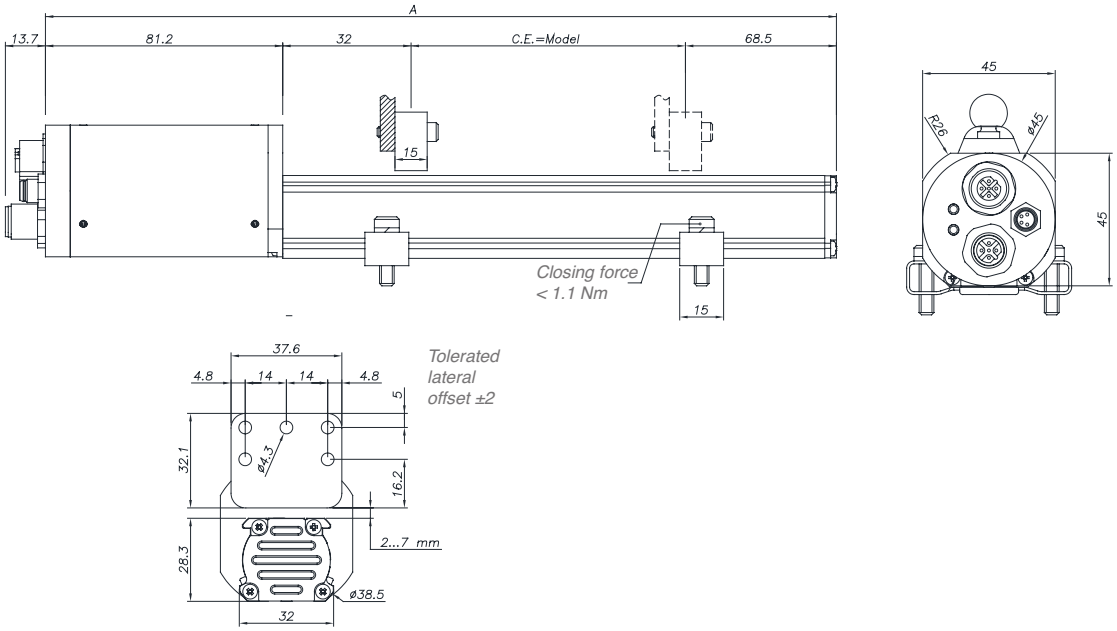

Note

1) For strokes > 2500mm use sliding or floating cursors at a max. height of 4mm

2) On multicursor versions, the cursors must work at the same distance and temperature and be at least 75 mm apart

PROFIBUS STRUCTURE AND CONNECTION

MK4PW OUTPUT

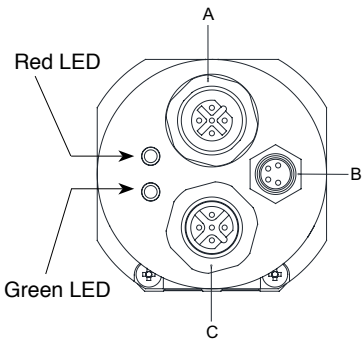

CONNECTOR A (M12 FEMALE)	
1	5VD_ISO
2	LINE_A/N
3	GND_ISO
4	LINE_B/P
5	GROUND

CONNECTOR B (M8 MALE)	
1	24V
2	N.C.
3	0V
4	N.C.

CONNECTOR C (M12 MALE)	
1	5VD_ISO
2	LINE_A/N
3	GND_ISO
4	LINE_B/P
5	GROUND

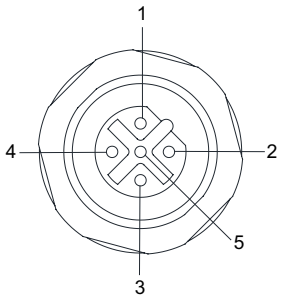

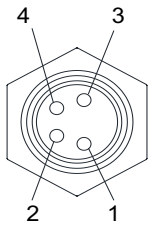

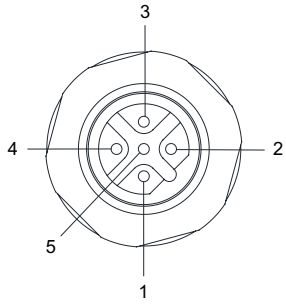

RED LED	GREEN LED	DESCRIPTION
Off	Off	Transducer not powered
Off	Flashing (f= 1 HZ)	Transducer ready to start communicating with Master (state =Wait Parm)
Off	On	Transducer in cyclical communication with Master (state= Data_Exch).
On	On	1. At power-on: signals correct functioning of LEDs. 2. In Data-Exchange mode: signals magnet error (number of magnets measured incompatible with current parameterization).

PROFIBUS STRUCTURE AND CONNECTION

A Profibus network lets you connect peripheral Slave devices (transducers or actuators) to Class 1 Master central control units (typically PLCs).
The network software is installed with a Class 2 Master containing a database with the GSD files of all connected devices. The network is designed and parameterized with a graphics tool, then the configuration is downloaded to the Class 1 Masters in the network.
The Class 1 Master(s) start(s) the communication process with the peripheral devices according to the configuration received from the Class 2 Master.
This process includes an initial data exchange regarding Slave identification, parameterization, and configuration.
When this phase is done, application management begins with exchange of process data on the network.
The GSD file contains all information on device identification, supported functions, and length/format of data packets.

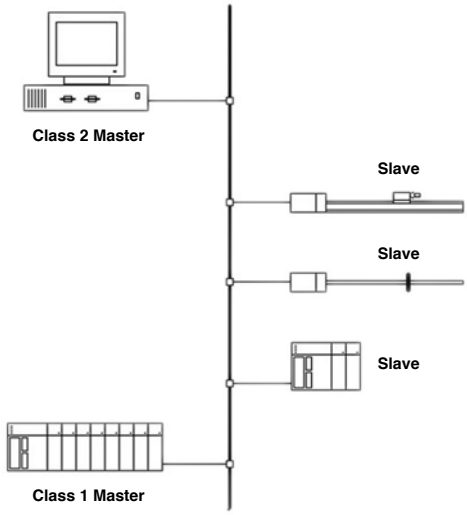

Connection with two M12 connectors + 1 M8 connector:
- no T connection required
- standard M12 and M8 connectors
- separate power supply line (ideal for use of programmer)
- for power supply: use a shielded cable with metal connector and shield connected to connector case

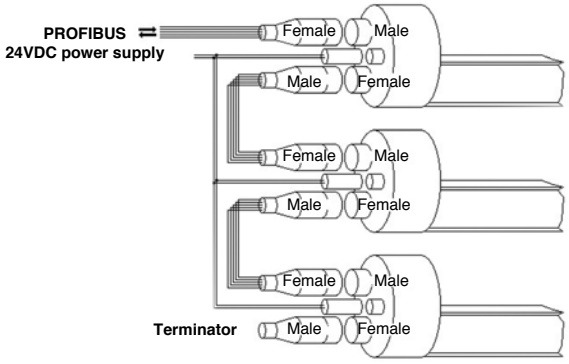

ORDER CODE

Position transducer | M | K | 4 | P | W | | | | | | | Configurator | | 0 | 0 | 0 | X | X | X | X | X | 0 | 0 | X | 0 | X | X |

Model

Number of cursors	
1 cursor	**1**
2 cursors	**2**
4 cursors	**4**

Output	
Position	**A**
Position + Speed	**B**

Node address programming
xxx = standard; (node = 125) **nnn** = node specified by customer (1...124)

Address block	
X	Address change allowed (standard)
B	Address blocked

Attachments	
0	No certificate to be attached
L	Linearity curve to be attached

Ex.: MK4-P-W-0400-2-A 0000-X-XXXX-00-X-0-XX
Transducer model MK4, Profibus DP output, 2 M12 connectors + 1 M8 connector, model 400, 2 cursors, position only, node number 125, address change allowed

OPTIONAL CURSORS

P | C | U | R | | | | 0 | 1

Cursors	
Sliding cursor, axial joint (low) (STANDARD)	**035**
Sliding cursor, axial joint (high)	**036**
Sliding cursor, angle joint	**037**
Floating cursor	**039**

Number of cursors

PCUR035

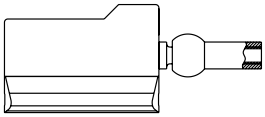

PCUR036

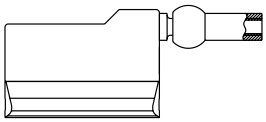

PCUR037

PCUR039

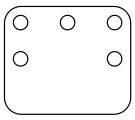

OPTIONAL BRACKETS

P | K | I | T | | | |

Fastening brackets (2 bracket for each Kit)	
Steel brackets center distance 42.5mm	**090**
Steel brackets center distance 50mm	**091**

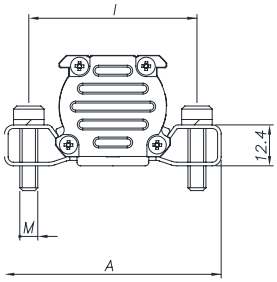

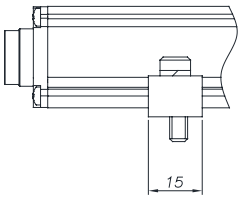

Bracket code	Center distance (i)	Screw (V)	Dimensions (A)
PKIT090	42.5	**M4**	**56**
PKIT091	50	**M5**	**63.5**

OPTIONAL CABLES

M8 4-pin axial female connector, pre-wired with 3-meter cable for power supply	**PCAV700**
M8 4-pin axial female connector, pre-wired with 5-meter cable for power supply	**PCAV701**
M12 5-pin axial female connector, pre-wired with 3-meter cable for communication	**PCAV702**
M12 5-pin axial female connector, pre-wired with 5-meter cable for communication	**PCAV704**
M12 5-pin axial male connector, pre-wired with 3-meter cable for communication	**PCAV703**
M12 5-pin axial male connector, pre-wired with 5-meter cable for communication	**PCAV705**

OPTIONAL ACCESSORIES

Profibus terminator (M12 axial male connector)	**CON049**
M12 5-pin axial male flying connector	**CON380**
M12 5-pin axial female flying connector	**CON390**
Node number programmer	**PNP-1**
GSD file downloadable from www.gefran.com	

OPTIONAL NODE NUMBER PROGRAMMER

The PNP-1 node number programmer lets you read and set the node number on a Profibus network for MK4-P and IK4-P series sensors.
This accessory component is used if you do not have a Class 2 Master programmer.
See the PNP-1 programmer technical sheet and manual for detailed information.

Jiangmen LEADER Electronic Co., Ltd.
#68 2nd Str, CuiShanLingShui, WuYi Country Garden, Jiangmen City, Guangdong, China
Tel:+86 750 3289680 3289698 Fax:+86 7503289699
http://www.leadersensors.com E-mail:leader@leadersensors.com